360° Rotatable Industrial Borescope User Manual

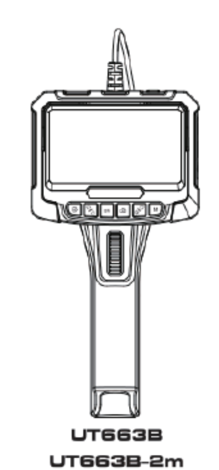

UT663B
UT663B-2m
UT663B-3m

Please read the User Manual carefully before your using!

PREFACE

Thank you for purchasing the new 360° Rotatable Industrial Borescope. In order to use this product safely and correctly, please read this manual thoroughly.

After reading this manual, it is recommended to keep the manual at an easily accessible place, preferably close to the device, for future reference.

LIMITED WARRANTY AND LIABILITY

Uni-Trend guarantees that the product is free from any defect in material and workmanship within one year from the purchase date. This warranty does not apply to damages caused by accident, negligence, misuse, modification, contamination and improper handling. The dealer shall not be entitled to give any other warranty on behalf of Uni-Trend. If you need warranty service within the warranty period, please contact authorized service center or send the product back with problem description.

This warranty is the only compensation you can obtain. Uni-Trend will not be responsible for any special, indirect, incidental or subsequent damage or loss caused by any reason or speculation. As some areas or countries do not allow limitations on implied warranties and incidental or subsequent damage, the above limitation of liability and stipulation may not apply to you.

Safety & Maintenance

- Do not hit the Lens violently. Do not pull the cables so hard.
- Be careful to use the device in somewhere rough and uneven, and avoid scratching the waterproof layer of probe.
- The Lens probe is not made from heat-resistant materials, so please cool down the temperature of engine to be normal when inspect it.

- Keep the Lens and device clean and dry when not using, to avoid contacting any oil contaminations or other corrosives.
- The product is not suitable for users who are limited in body health, sensory ability or spirit ability.
- Do not let children contact and operate the device.
- Do not disassemble the device randomly and contact sellers for maintenance service if any damaged.
- The product is for industrial borescope use, and not suitable for medical use or body check.

Battery

- Please charge the device via the home charger (5V=1A, 5V=2A) meets safety rules.
- The device is supported to be used in the charging process.
- When the device is not used for a long time, charge it at least once every three months, to avoid unrecoverable damage caused by over-discharge.

Functions

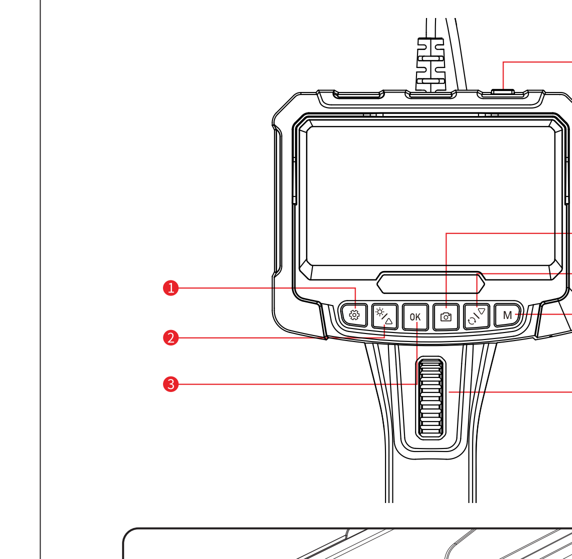

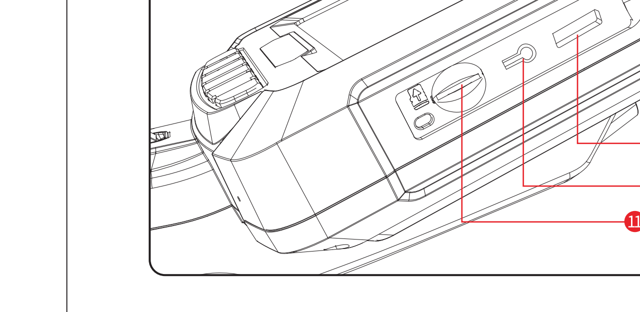

Button Details

Buttons	Photo-Capturing Mode	Video-Recording Mode	Gallery Mode
❶ ⚙	Enter/Exit the Setting menu	Enter/Exit the Setting menu	Delete/Protection
❷ ☼/△	Adjust LED brightness/Long press to zoom screen images	Adjust LED brightness/Long press to zoom screen images	Move left/Viewing/Video fast-backward
❸ OK	Freeze/Unfreeze images	Freeze/Unfreeze images	Confirm
❹ ⏻	Press and hold for 3s to power on/off	Press and hold for 3s to power on/off	Press and hold for 3s to power on/off
❺ 📷	Short press to capture/Dual-Lens: Long press to switch Lens	Short press to start/stop recording video	N
❻ ○/▽	Rotate the Lens views	Rotate the Lens views	Move right/Viewing/Video fast-forward
❼ M	Three modes for switching: Images/Videos/Gallery		
❽	Scroll to adjust Lens		
❾	Charging interface		
❿	RESET button		
⓫	TF card slot		

Operation

Long press "⏻" button for 3s to power on/off.

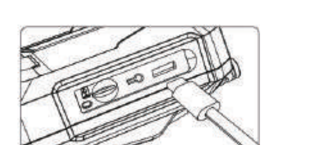

Charge the device via the Type-C cable.

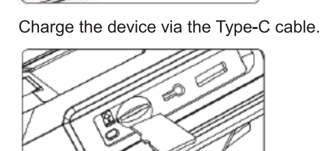

Insert the TF card.

Warning: When insert the TF card:

- Insert the TF card in the power-off status.
- Note whether the inserting direction, front and back side of TF card is correct or not.
- Do not violently insert or pull out the TF card to avoid card slot damage.

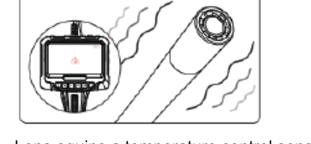

Lens equips a temperature control sensor

- Lens alarms in 75°C

- Lens stops running and screen off in 85°C
- Lens runs normally in 70°C or below

Language Settings

The default language is English. The system supports Simplified Chinese, Japanese, English, Korean, French, German, Italian, Spanish, Russian and Polish.

①. Press "⚙" button to enter the Setting page.
②. Select the Language Setting.
③. Press UP and DOWN button to select the language
④. Press OK button to save it.

Enter the Gallery

Press "M" to switch to the Photo-Capturing or Video-Recording mode.

Press "📷" to capture or record.

Press "M" to switch to the Gallery and select the images or videos to view. Press "⚙" to delete images or videos.

Images & Videos Copy

Copy directly via the TF card reader, or connect to computer to copy via the Type-C cable.

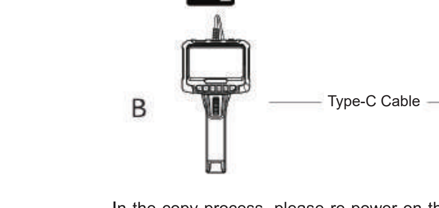

In the copy process, please re-power on the device or re-plug the Type-C cable when the connection between device and computer failed. Do not unplug the Type-C cable during the data transmission, otherwise it will be failed.

Charging Guideline

1. Charge the device via the Type-C USB adapter (5V=1A, 5V=2A), and fast charge is not supported.
2. 1) In power-on charging, the battery icon shows in green with lightning sign. In power-off charging, the battery icon shows in step by step.

FAQ

1) The image output is freezing up

Check the battery status of device, or re-power on the device.

2) Machine crash, image output failed or screen off

Press the RESET button on the right side of device, or re-power on the device.

3) Unclear imaging

The optimum imaging focus is 2cm-10cm, please align the device with the target, or use a clean alcohol cloth to wipe the front-end of Lens.

4) Charge

Please charge the device via the (5V=1A, 5V=2A) charger, and fast charge is not supported.

5) Lens overheated

The Lens overheat phenomenon is commonly seen, especially in the highest LED brightness, but without affecting the normal use or service life.

6) TF card fails to identify

Check whether the TF format is FTA32 or not, not formatting. Please re-insert the TF card when it fails to identify.

Accessories

360° Rotatable Industrial Borescope	1
Type-C Cable	1
User Manual	1
Gift Box	1
Cloth Bag	1
32GB-TF Card	1

Specification

Models		UT663B	UT663B-2m	UT663B-3m
System	Screen Size	5.0"		
	System Languages	Simplified Chinese, Japanese, English, Korean, French, German, Italian, Spanish, Russian, Polish		
	Image Pixels	JPG:1920*1080		
	Video Pixels	AVI: 1920*1080		
	Basic Functions	Photo-capturing, Video-recording, Playback, High temperature warning protection, Image rotation, Audio recording		
	Storage	Standard 32GB-TF (maximum 64GB)		
Hose	Rotational Angle	180° Bi-directional		
	Hose Material	Medal and hard hose		
	Hose Length	1m	2m	3m
Lens	Lens Diameter	8mm		
	Light Sensor Chip	CMOS		
	Field of View (FOV)	70°		
	Depth of Field (DOF)	20~100mm		
	Adjustable LED Lights	4-Setting, 8 LEDs		
	Pixels	1000K		
	IP Rating	IP67		
Battery	Battery	3.7V/3000mAh		
	Battery Life	4h		
Working Conditions	Lens Temperature	0°C~80°C		
	Working Temperature	0°C~45°C		
	Humidity	<90%RH, No condensation		

The manual is subject to change without prior notice!

Due to different batches, the materials and details of actual products may be slightly different from the graphic information, please refer to the actual product received. Experimental data provided in the page is from internal laboratory of UNI-T, but it should not be a reference for customer to place orders. Any questions, please contact the customer service, thanks!

UNI-T®
UNI-TREND TECHNOLOGY (CHINA) CO., LTD.

No.6, Gong Ye Bei 1st Road,
Songshan Lake National High-Tech Industrial
Development Zone, Dongguan City,
Guangdong Province, China
Tel: (86-769) 8572 3888
http://www.uni-trend.com